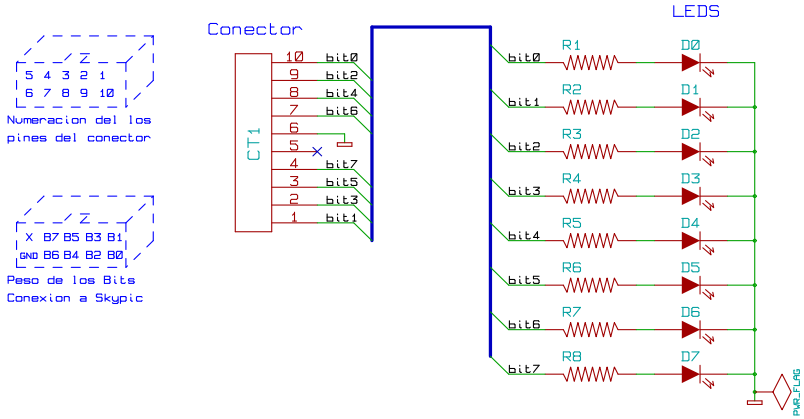

(c) Juan Gonzalez 2005
Derived from the open board PCTLED
designed by Andres Prieto-Moreno (C) 2001-2005
Open Hardware License
www.iearobotics.com

Title: Freeleds Board		
Size: A4	Date: 21 jun 2005	Rev: 0.1
KiCad E.D.A.		Sheet: 1/1