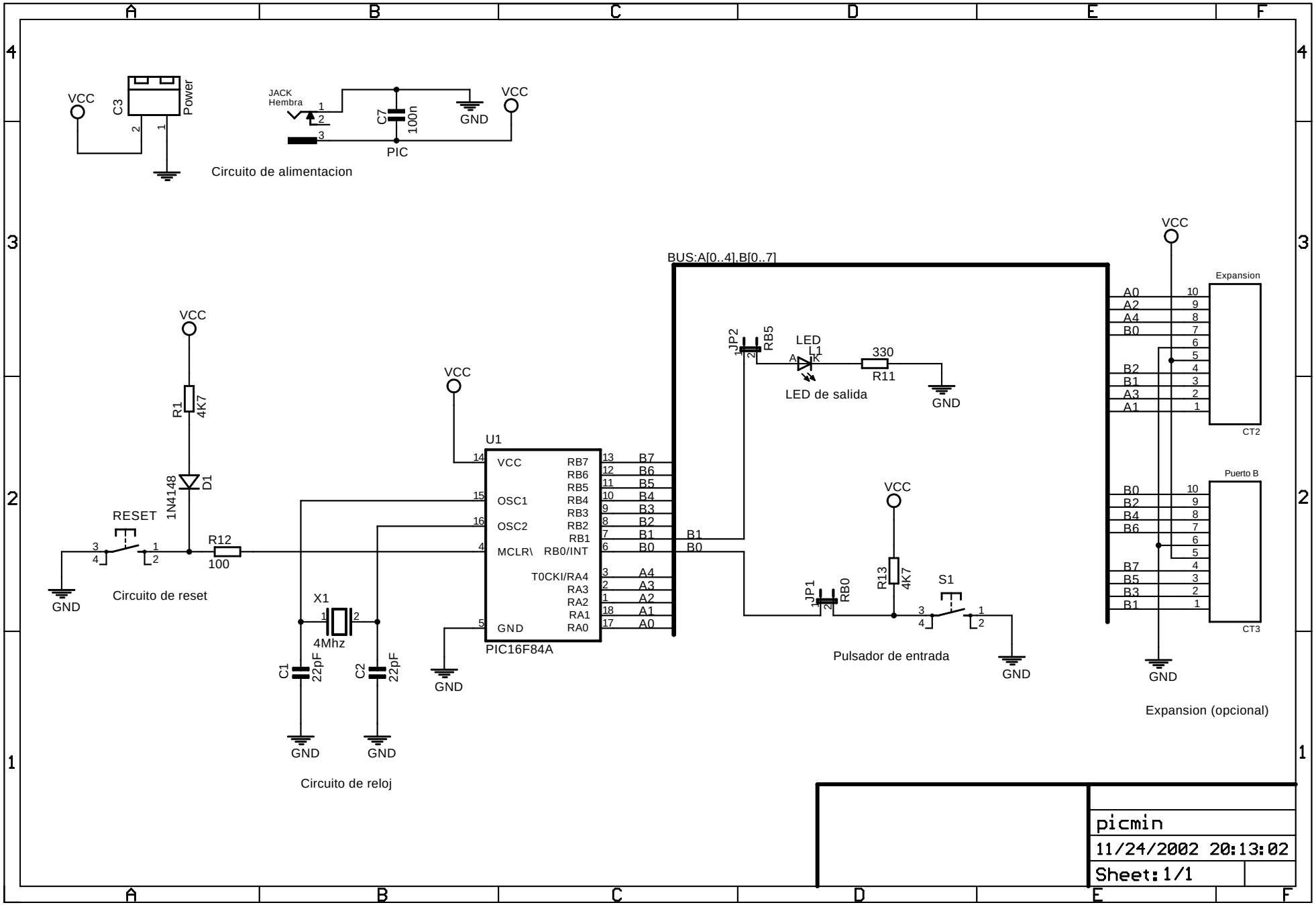

11/24/2002 20:28:32 f=0.99 /home/aprieto/eagle/CTPIC/New_Project_1/picmin.sch (Sheet: 1/1)